PHÖNIX CONTROL
Founded 1981

PHÖNIX CONTROL Méréstechnikai és Alkatrészgyártó Kft.

Gauge valve PN250 / CL1500

Handwheel
Nipple connection to gauge
Angle seat
Spindle screw inside
Seat renewable

Product group	**760**
Type	**52**
Sheet: 69	Revision: 3
Date:	04/22

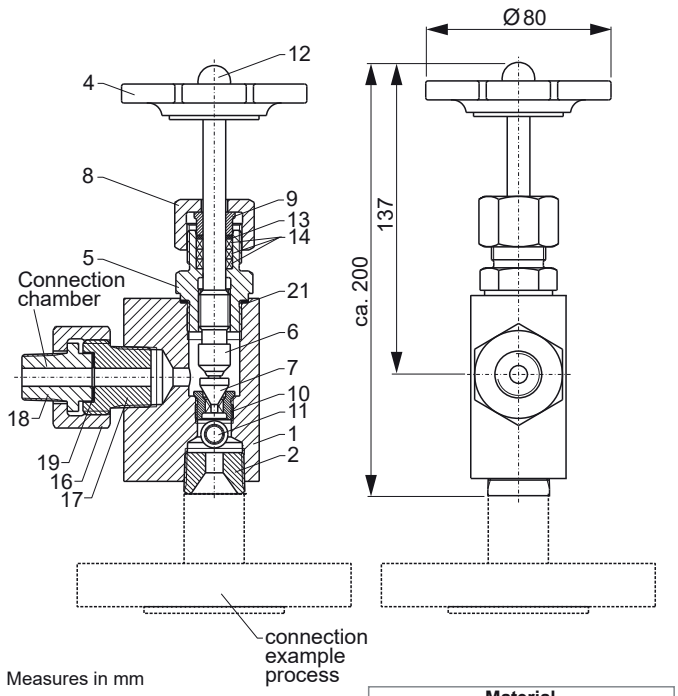

Measures in mm

Pos.	Denomination	Dimension	Material Exec. CS	Material Exec. SS
1	Housing	80 x 60 x 40	1.0460/A105	SS316
2	Nipple	3/4"NPT	1.0460/A105	SS316
3				
4	Handwheel	D00388K80M08	Duroplastic/Steel	
5	Bonnet	572012415AB	SS	
6	Spindle	5650320759	SS	
7	Cone	5610255459	SS	
8	Nut	592102405AB	SS	
9	Stuffing box	5706010059	SS	
10	Seat	5604120459	SS	
11	Ball	D054011120	SS	
12	Nut M8	D15879060	SS	
13	Base ring	0100016020SI	SIL4400	
14	Packing	0016001040GR	Graphite	
15				
16	Nut 1"	592303414AB	SS	
17	Nipple	3/4"NPT/1"	SS	
18	Nippel	1/2"NPT	SS	
19	Sealing	0220010010PS	Graphite	
20				
21	Sealing	D07603130024	SS	

Field of Application

The gauge valve is to close the tank against the level gauge. It is actuated by a handwheel. As a standard an automatic ball check is integrated. The process connection is manufactured acc. to customer's specification.

General Data

Material
- Housing, nipple, flange: CS or SS
- Trim: SS

other materials on request
Orientation: horizontally, see Fig. orientation
Ball check diff. pressure: >0,5 bar
Process connection: DIN/ANSI acc. to cust. spec.
Weight: ca. 2,0 kg

Design Data

Operating pressure: up to 25 MPa/1500 lbs
Temperature media:
Housing, nipple, flange SS: -200 ... +400 °C
Housing, nipple, flange CS: -10 ... +400 °C

Orientation

Examples

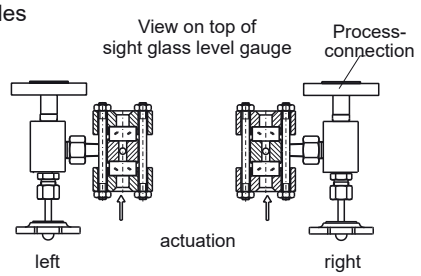

CS (= carbon steel) rsp. SS (= stainless steell type 316SS) are materials suitable for pressure vessels according to EN oder ASME.

subject to alterations

Ordering no.

7 6 0 . 5 2 X X - X _ _ _ _ X X X

X X X	see 700.VAR	Connection process
S	CS	Material
4	SS	
_ _	Stuffing box	spindle sealing
0 F	Bellows	

Phönix Control Kft.

Bolyki Tamás street 44.
Ozd, 3600, Hungary
Tel.: +36-48-572-310
+36-48-572-567
Fax.:+36-48-471-642
E-mail: info@phoenix-brv.hu
web: www.phonixcontrol.hu