PHÖNIX CONTROL
Founded 1981

PHÖNIX CONTROL Méréstechnikai és Alkatrészgyártó Kft.

# Gauge valve PN250 / CL1500

Handwheel
Nipple connection to gauge
Y-pattern seat
Spindle screw inside
Seat renewable

| | |
|---|---|
| Product group | **760** |
| Type | **50** |
| Sheet: 65 | Revision: 3 |
| Date: | 04/22 |

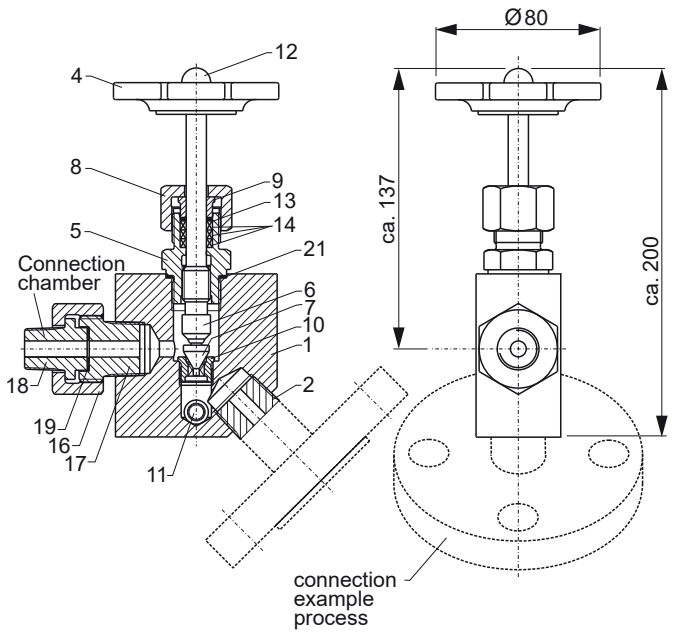


Measures in mm

| Pos. | Denomination | Dimension | Material Exec.CS | Material Exec. SS |
|---|---|---|---|---|
| 1 | Housing | 80 x 80 x 40 | 1.0460/A105 | SS316 |
| 2 | Nipple | 3/4"NPT | 1.0460/A105 | SS316 |
| 3 | | | | |
| 4 | Handwheel | D00388K80M08 | Duroplastic/Steel | |
| 5 | Bonnet | 572012415AB | SS | |
| 6 | Spindle | 5650320759 | SS | |
| 7 | Cone | 5610255459 | SS | |
| 8 | Nut | 592102405AB | SS | |
| 9 | Stuffing box | 5706010059 | SS | |
| 10 | Seat | 5604120459 | SS | |
| 11 | Ball | D054011120 | SS | |
| 12 | Nut M8 | D15879060 | SS | |
| 13 | Base ring | 0100016020SI | SIL4400 | |
| 14 | Packing | 0016001040GR | Graphite | |
| 15 | | | | |
| 16 | Nut 1" | 592303414AB | SS | |
| 17 | Nipple | 3/4"NPT/1" | SS | |
| 18 | Nippel | 1/2"NPT | SS | |
| 19 | Sealing | 0220010010PS | Graphite | |
| 20 | | | | |
| 21 | Sealing | D07603130024 | SS | |

## Field of Application

The gauge valve is to close the tank against the level gauge. It is actuated by a handwheel. As a standard an automatic ball check is integrated. The process connection is manufactured acc. to customer's specification.

## General Data

Material
- Housing, nipple, flange: CS or SS
- Trim: SS

other materials on request
Orientation: horizontally, see Fig. orientation
Ball check diff. pressure: >0,5 bar
Process connection: DIN/ANSI acc. to cust. spec.
Weight: ca. 2,5 kg

## Design Data

Operating pressure: up to 25 MPa/1500 lbs
Temperature media:
Housing, nipple, flange SS: -200 ... +400 °C
Housing, nipple, flange CS: -10 ... +400 °C

## Orientation

Examples

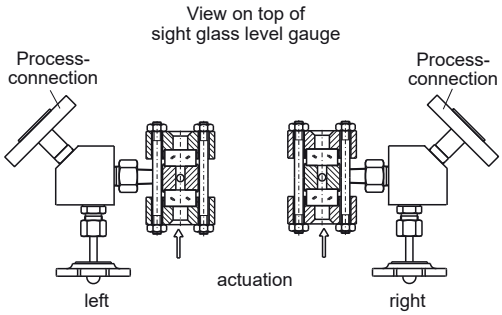


CS (= carbon steel) rsp. SS (= stainless steell type 316SS) are materials suitable for pressure vessels according to EN oder ASME.

subject to alterations

Ordering no.

7 6 0 . 5 0 X X - X _ _ _ _ X X X

| | | |
|---|---|---|
| X X X | see 700.VAR | Connection process |
| S | CS | Material |
| 4 | SS | Material |
| _ _ | Stuffing box | spindle sealing |
| 0 F | Bellows | spindle sealing |


**Phönix Control Kft.**

Bolyki Tamás street 44.
Ozd, 3600, Hungary
Tel.: +36-48-572-310
+36-48-572-567
Fax.:+36-48-471-642
E-mail: info@phoenix-brv.hu
web: www.phonixcontrol.hu